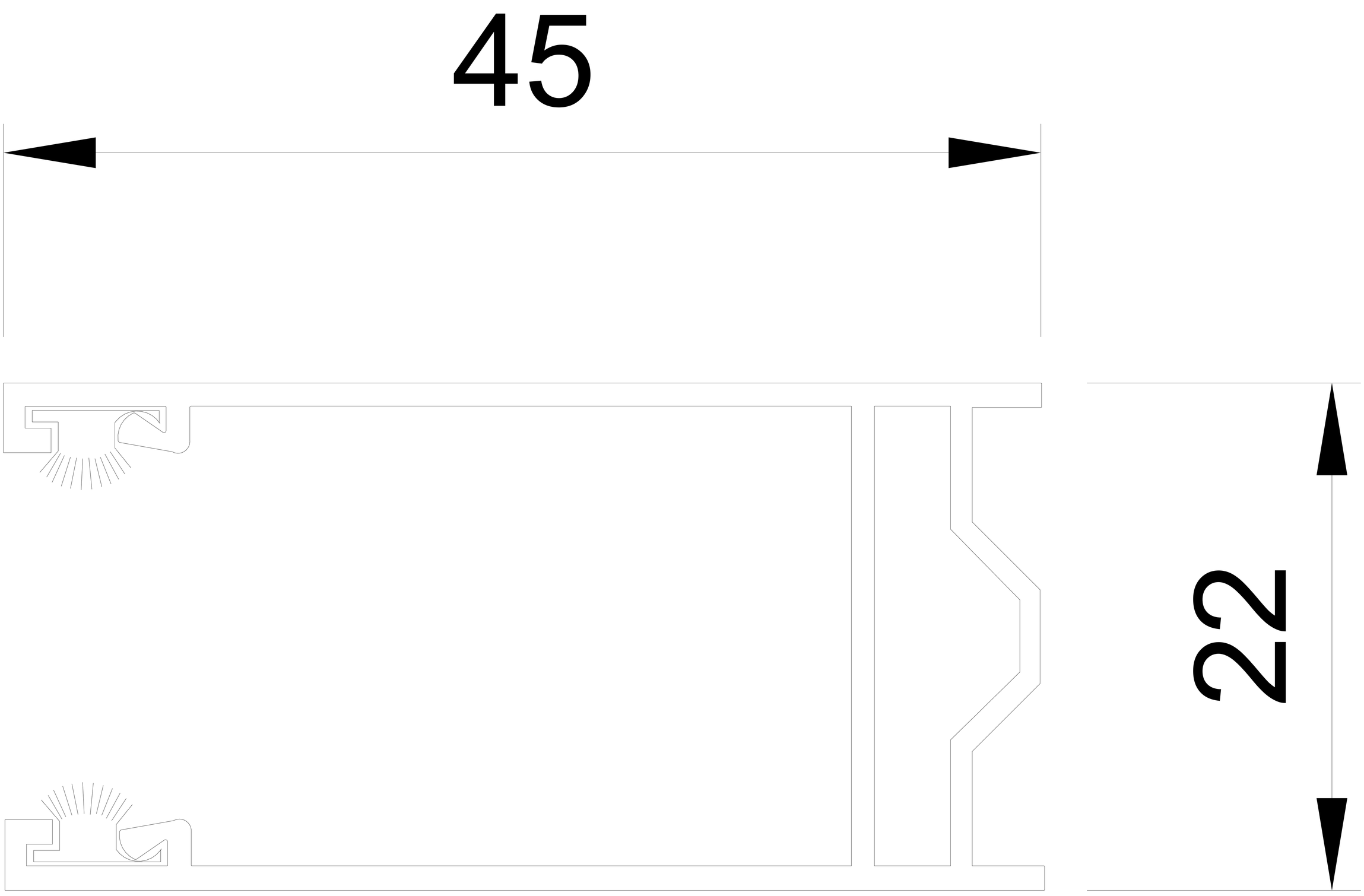

marchal

Coulisse
TZ

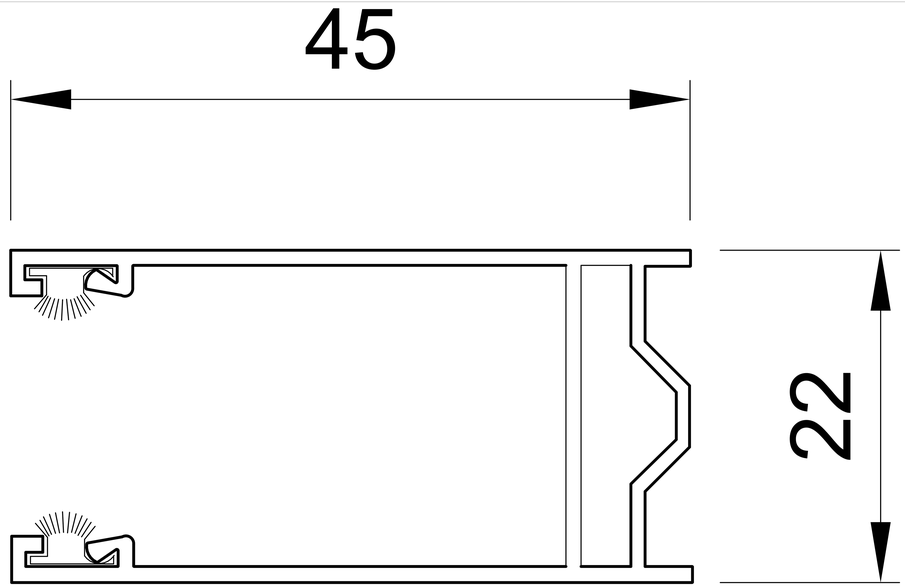

marchal

Coulisse
TZ

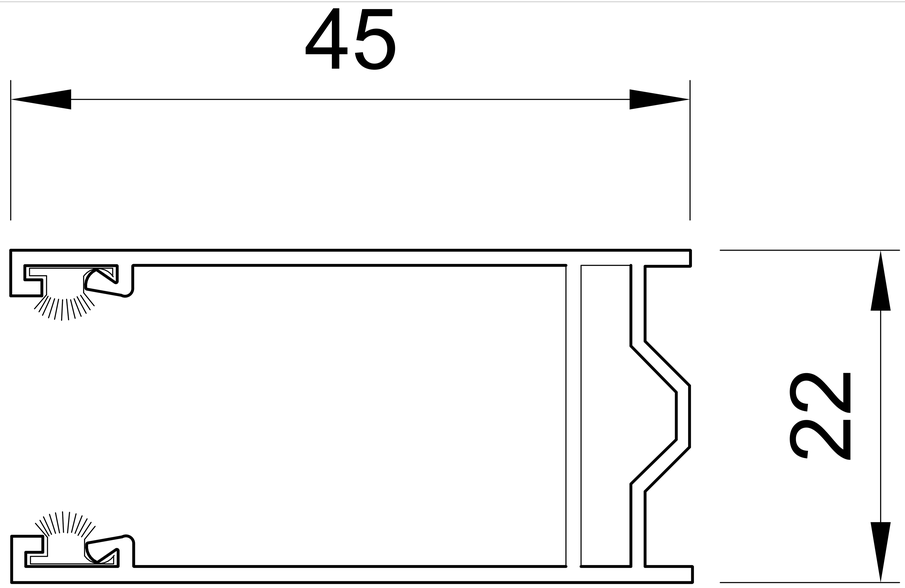

marchal

Coulisse
TZ